Endicott Research Group, Inc.
2601 Wayne St., Endicott, NY 13760
607-754-9187 Fax 607-754-9255
http://www.ergpower.com

SFDLC3760F

RoHS Compliant

Specifications and Applications Information

03/25/11

Smart Force LED Driver

The ERG *Smart Force Series* of LED Drivers are specifically designed for applications which require wide dimming and LCD brightness stability over a wide input voltage range. The SFDLC3760F is designed to provide backlight power for the NEC NL4827HC19-05B display.

Designed, manufactured and supported within the USA, the SFDL features:

- ✓ Less than 8 mm in height
- ✓ Wide input voltage range
- ✓ Constant LED current
- ✓ External or internal dimming
- ✓ High dimming ratio
- ✓ Separate enable & dimming function
- ✓ Soft start
- ✓ One year warranty

Package Configuration

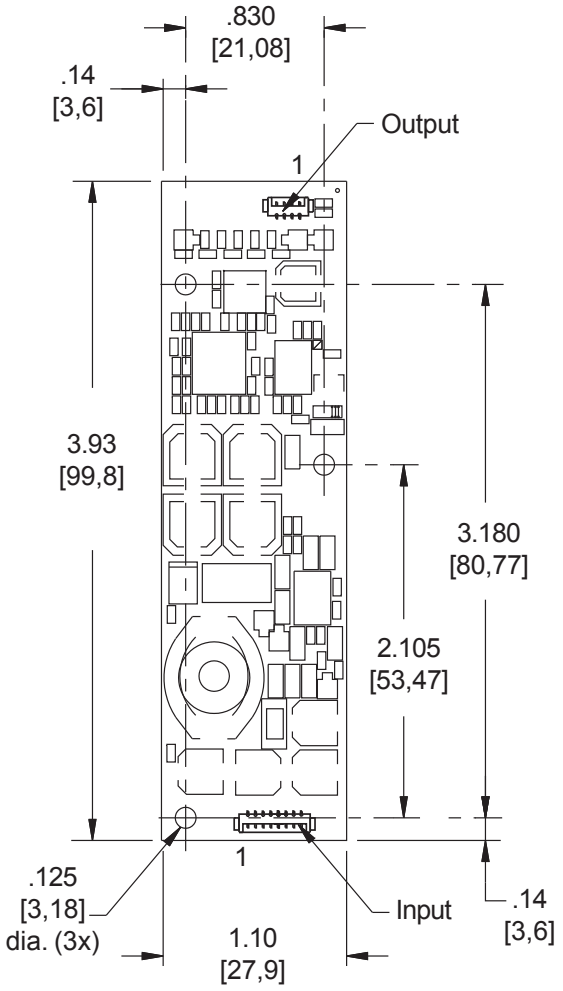

Mass: 17 grams

Connectors	
Input Connector Molex 53261-0871	**Output Connector *** Molex 53261-0471
J1-1 Vin(+) J1-2 Vin(+) J1-3 GND J1-4 GND J1-5 Enable J1-6 Vin(+) J1-7 Control J1-8 GND	J2-1 Cathode 1 J2-2 Anode 1 J2-3 Cathode 2 J2-4 Anode 2 * Requires harness: ERG part number H10004304 recommended

RoHS Compliant

Absolute Maximum Ratings

Rating	Symbol	Value	Units
Input Voltage Range	V_{in}	-0.3 to +20.0	Vdc
Storage Temperature	T_{stg}	-40 to +85	°C
Control Voltage	$V_{Control}$	0 to 5.0	Vdc
Enable Input Voltage	V_{Enable}	0 to Vin	Vdc

Operating Characteristics

Unless otherwise noted Vin = 12.00 Volts dc and Ta = 25°C.

Characteristic	Symbol	Min	Typ	Max	Units
Input Voltage	V_{in}	+8.0	+12.0	+13.0	Vdc
Component Surface Temperature (Note 1)	T_s	-20	-	+80	°C
Input Current	I_{in}	0.07	0.08	0.09	Adc
LED String Voltage	V_{LED}	10	12	14	Vdc
Efficiency	η	-	50	-	%
Output Current (per string)	I_{out}	19	20	21	mAdc
Enable Pin (Note 2)					
Turn-on Threshold	V_{thon}	-	-	1.55	Vdc
Turn-off Threshold	V_{thoff}	1.25	-	-	Vdc
Enable Input Impedance	R_{Enable}	-	5.0	-	kOhms
Control Pin					
Full-on Threshold	V_{fon}	-	0.9	-	Vdc
Full-off Threshold	V_{foff}	-	4.2	-	Vdc

Specifications subject to change without notice.

Note 1 Surface temperature must not exceed 80°C, except for U5 which must be kept below 100°C; thermal management actions may be required.

Note 2 The input voltage to the driver must be within its operating characteristic before the driver is enabled, otherwise the driver may not start or may shut down unexpectedly.

Onboard PWM

Unless otherwise noted Vin = 12.00 Volts DC, T_a = 25 °C and unit has been running for 5 minutes.

Characteristic	Symbol	Min	Typ	Max	Units
Frequency	f_{pwm}	-	160	-	Hz
Control Input Bias Current	I_{cbias}	-	-	10	uA

Application Information

The ERG SFDLC3760F has been designed to be configured in multiple ways:

NO DIMMING

- OPERATION: The SFD driver can be configured to operate without dimming by floating the Control Pin (J1-7), and the Enable Pin (J1-5).
- Pins 1 and 2 of connector J1 must be connected to +Vin, between 10 and 20 Vdc. Pins 3 and 4 of connector J1 must be connected to GND.

ONBOARD PWM DIMMING

- OPERATION: Onboard PWM configuration as shown in Figure 1 allows the user to control display brightness by controlling the onboard PWM generator. The user is responsible to provide an analog control signal. A dimming ratio up to 1000:1 is possible with this configuration.
- DIMMING: Dimming is accomplished by applying an analog voltage to the Control Pin (J1-7). Display brightness is modulated by controlling the Control Pin voltage as shown in Graph 1.
- ENABLE/DISABLE: The driver may be enabled or disabled (turned on and off) by applying a DC voltage to the Enable Pin(J1-5). Enable Pin on and off levels are specified in the Operating Characteristics section of the data sheet. The driver can also be enabled by floating the Enable Pin.
- Pins 1 and 2 of connector J1 must be connected to +Vin, between 10 and 20 Vdc. Pins 3 and 4 of connector J1 must be connected to GND.

EXTERNAL PWM DIMMING

- OPERATION: External PWM configuration as shown in Figure 2 allows the user to control display brightness with an externally generated PWM signal. The user is responsible to provide the PWM signal. A dimming ratio up to 5000:1 is possible with this configuration.
- DIMMING: Dimming is accomplished by applying a PWM signal to the Enable Pin (J1-5). PWM on and off levels are specified in the Operating Characteristics section of the data sheet. Display brightness is modulated by controlling the PWM duty cycle as shown in Graph 2.
- ENABLE/DISABLE: The driver may be enabled or disabled (turned on and off) by applying a DC voltage to the Control Pin (J1-7). Control Pin on and off levels are specified in the Operating Characteristics section of the data sheet. The driver can also be enabled by floating the Control pin.
- Pins 1 and 2 of connector J1 must be connected to +Vin, between 10 and 20 Vdc. Pins 3 and 4 of connector J1 must be connected to GND.

ONBOARD PWM DIMMING

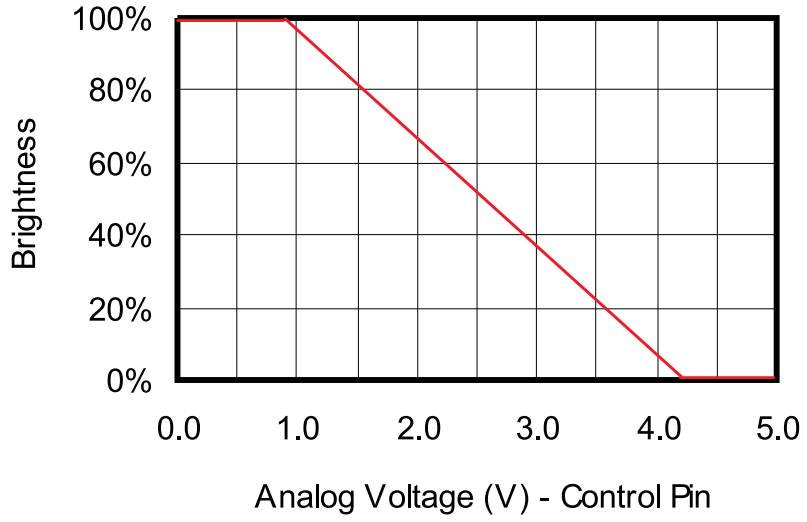

Graph 1

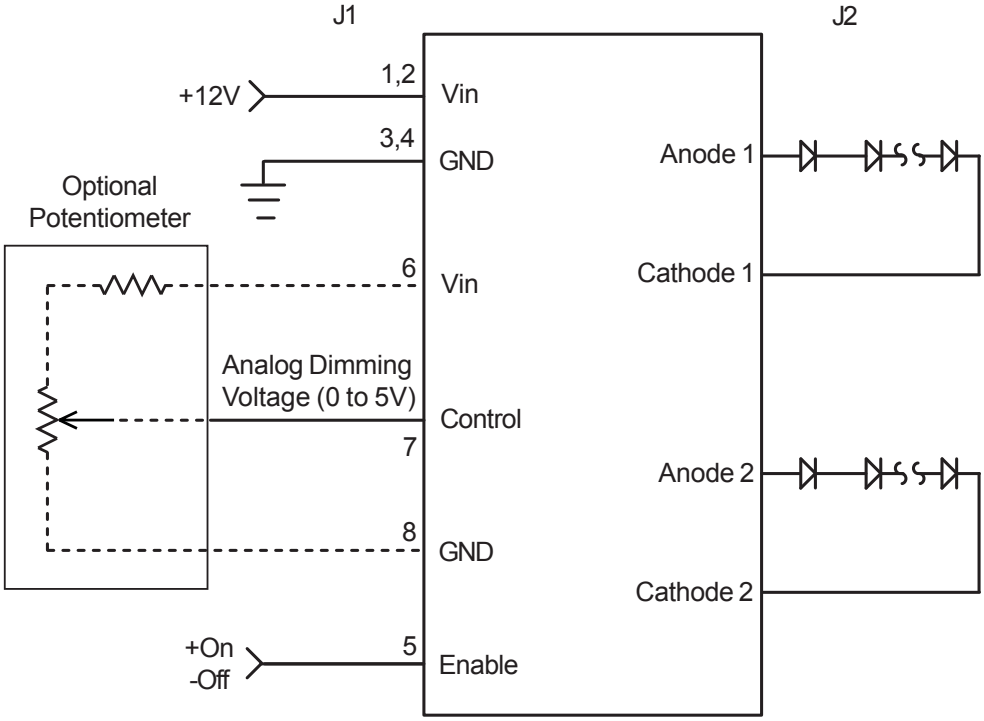

Figure 1

EXTERNAL PWM DIMMING

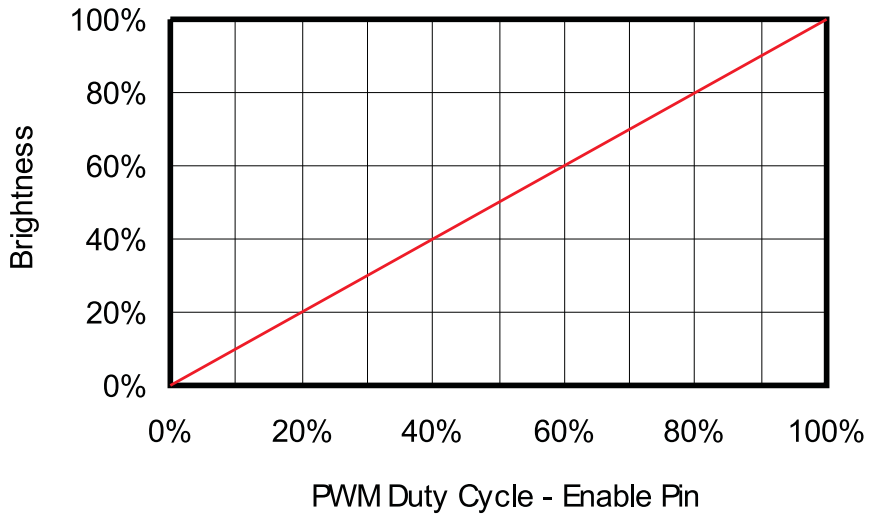

Graph 2

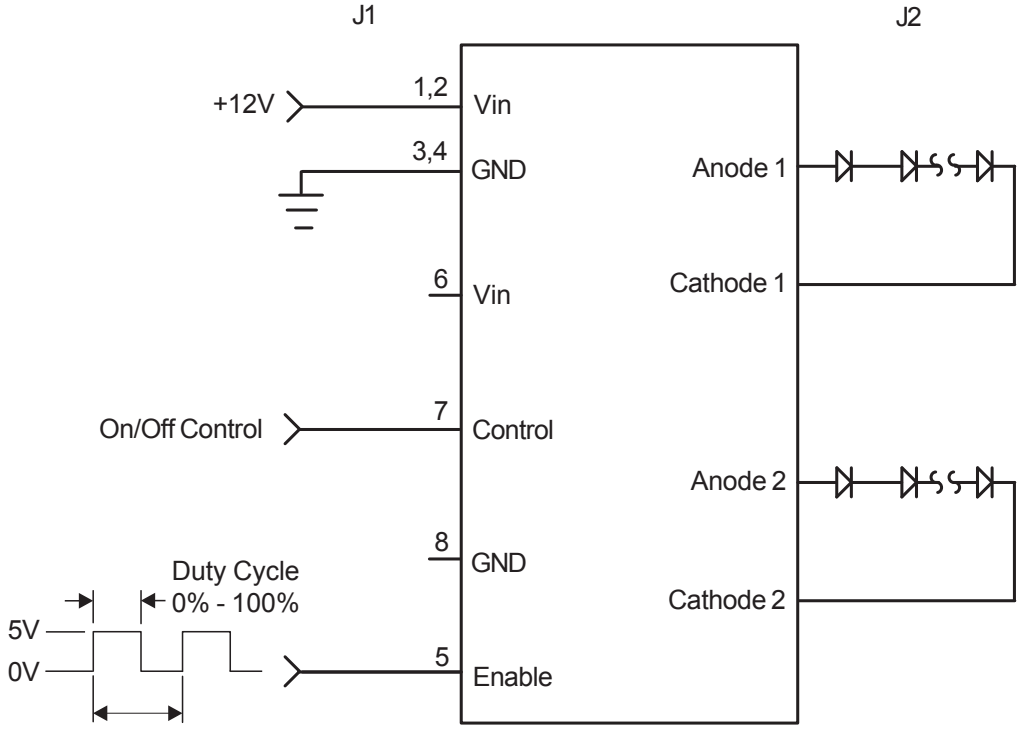

Figure 2

Endicott Research Group, Inc. (ERG) reserves the right to make changes in circuit design and/or specifications at any time without notice. Accordingly, the reader is cautioned to verify that data sheets are current before placing orders. Information furnished by ERG is believed to be accurate and reliable. However, no responsibility is assumed by ERG for its use.